## Introduction flow

1. Suggestion
2. Advance data acquisition
3. Simulation submission
4. On-site inspection
5. Order
6. Installation work
7. Ex-post data analysis

## Product specification

| volume | outside dimension(mm) | Connection electric wire | weight |
|---|---|---|---|
| | W×H×D | Length/wire | kg |
| Ssize(3p3w) Individual model | (120×120×60)×3 | 1m | 5kg |
| Msize(3p3w) Individual model | (130×156×91)×3 | CV8/2.7m | 6kg |
| Lsize(3p3w) Individual model | (140×161×101)×3 | CV8/2.7m | 7kg |
| 30kVA(3p3w) Individual model | (135×160×110)×3 | CV14/2.7m | 8kg |
| 50kVA(3p3w) Individual model | (140×170×135)×3 | CV14/2.7m | 10kg |
| 100kVA(3p3w) Individual model | (150×190×115)×3 | CV14/2.7m | 12kg |
| The lineup from 100kVA becomes the build -to-order manufacturing.(The size is a reference number.) | | | |
| 150kVA(3p3w) Individual model | (180×232×116)×3 | CV14/2.7m | 17kg |
| 200kVA(3p3w) Individual model | (190×272×142)×3 | CV22/2.7m | 22kg |
| 300kVA(3p3w) Individual model | (190×292×142)×3 | CV22/2.7m | 33kg |
| 400kVA(3p3w) Individual model | (180×332×152)×3 | CV38/2.7m | 39kg |
| 500kVA(3p3w) Individual model | (190×352×162)×3 | CV38/2.7m | 43kg |
| 750kVA(3p3w) Individual model | (240×442×152)×3 | CV38/2.7m | 66kg |
| 1000kVA(3p3w) Individual model | (300×502×202)×3 | CV38/2.7m | 135kg |

※The size is a reference number.　※Above 1000 kVA, it will be custom-mad

## Product lineup

3-phase individual type

**Home&store ecomo series**

(5～30kva)

S size　M～L size

Small facilities, home type

## Case study

**Toyo Corporation**

Installation date ‥‥July 2018
Unit ‥60kVA

**15.0% reduction**

**Auto parts manufacturing plant**

Installation date ‥‥July 2021
Unit ‥30kVA×3

**13.5% reduction**

**Clothing manufacturing and sales company**

Installation date ‥‥ August 2021
Unit ‥50kVA

**9.0% reduction**

**Clothing manufacturing and sales company**

Installation date ‥‥ October 2013
Unit ‥1,250kVA（700+500）

**9.0% reduction**

**Electric facilities material maker**

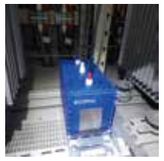

Installation date‥‥June 2023
Unit‥300kVA

**7.5%reduction**

**Freezers and refrigerators**

Installation date‥‥March 2024
Unit‥100kVA

**6.2%reduction**

**Major automobile company**

Installation date ‥‥ February 2020
Unit ‥300kVA

**9.6% reduction**

**Major chemical product manufacturing plant**

Installation date ‥‥ May 2015
Unit ‥800kVA（400+400）

**9.9% reduction**

For inquiries and applications, please contact the following


*Hayabusa Holdings Inc.*

**Ecomo Division**

3-4-13 Tsukiji, Chuo-ku, Tokyo
Electrical work Hall 5th floor
104-0045
Phone: +81-3-6264-3873
FAX: +81-3-6264-3874
Mail：ecomo@hayabusa.world

**Thailand Branch Showroom**

Charn Issara Tower 1
942 Rama IV Rd, Suriya
Wong, Bang Rak,
Bangkok 10500 4th
Floor room No 942/129

Contact

Gmail : admin@nusaprimaenergi.co.id
TEl　: +62-852-222-444-94


2025.03.3100.1

**Electric consumption up to 15% reduction**

The next generation power saving unit “ecomo”

# ecomo®

Patented

**PL insurance**　**Made in Japan**

## Power saving with ecomo everywhere

Plant

Supermarket

Warehouse/Freezer

Hospital

Office building/Store

Amusement facility

# Ecomo is a power saving unit that reduces electricity usage by 3-15%.

## $CO_2$ reduction

By saving electricity using ecomo, we reduce the CO2 emitted when fossil fuels are burned (during po wer generation) and contribute to the prevention of global warming.

## Safe and Secure

Since no electricity run to the ecomo main unit, it does not generate heat. In addition, since power is supplied from the power supply to the load without going through ecomo, it can be installed with confidence in any load.

## Easy installation

It can be installed in about 30 minutes.

## Movable

Even when the factory or office is relocated, ecomo can be removed and re- installed, so it can be used for a long time.

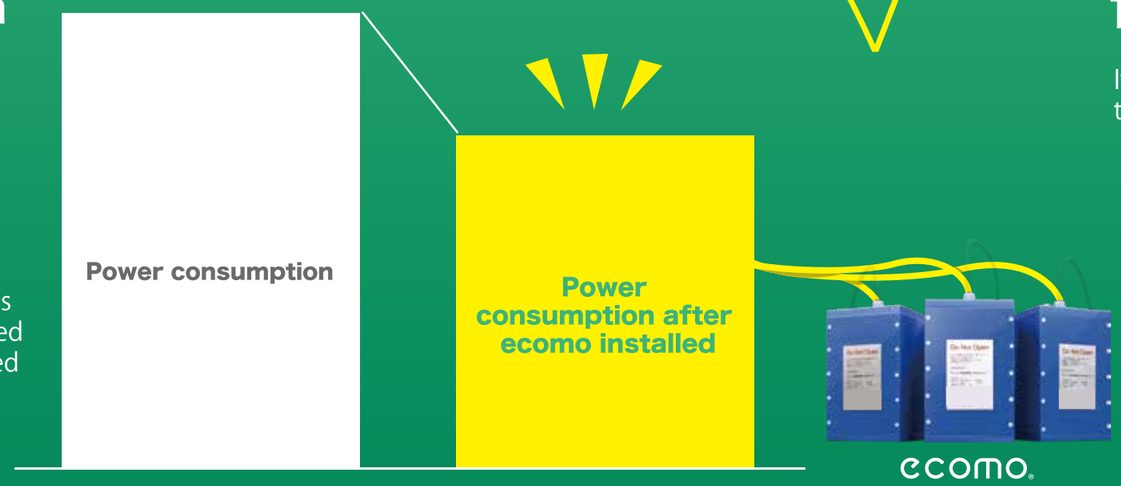


## 15 years design life

It has a long life design of 15 years so that it can be used for a long time.

## 7 years warranty

We are confident in the quality, so we guarantee the quality for 7 years. Please use it with confi dence

## How it works

Improve electricity flow ▶ The "electrons" emitted by tourmarin improve the current in the wire.

*This is for illustrative purpose.

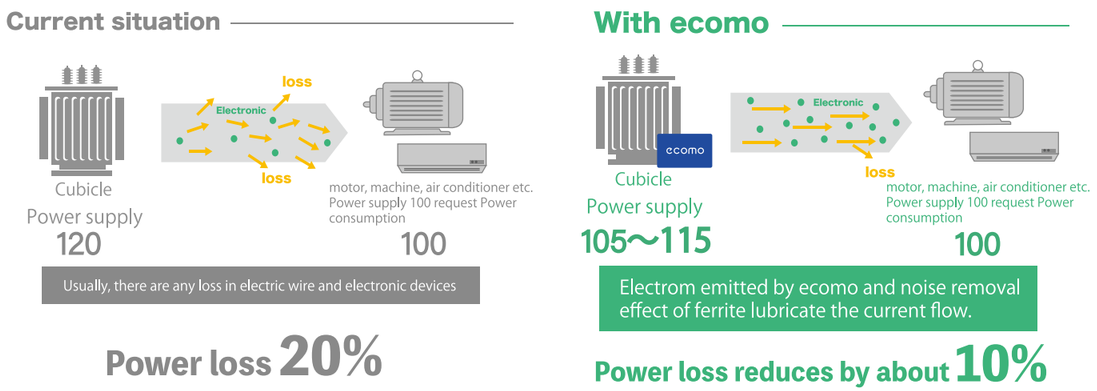


## Inside

Made from natural minerals ▶ It is composed of minerals with high dielectric constants such as tourmaline and ferrite.

### What is Tourmaline?

It was named Electric Stone by Swedish scholar Carl Linnaeus in the early 18th century.
Later, in the 19th century, scholars such as the Curie brothers and Rieke discovered that it emits 0.06 mA of electricity when pressure or heat is applied, and later a related paper was published by physicist Professor Kubo Tetsujiro of the University of Tokyo.
Tourmaline is the only mineral on Earth that generates electricity, and it has been confirmed to be a "permanent electrode" that continues to generate electricity indefinitely, no matter how small it is crushed, unless it is heated to nearly 1000°C.

### What is Ferrite?

It is a magnetic material made by mixing and sintering iron oxide as the main component with cobalt, nickel, manganese, etc., and can be used as a magnet.

## Installation image

Simply connect to the secondary side of the transformer or the secondary side of the breaker ▶ It can be easily installed in about 30 minutes to an hour.

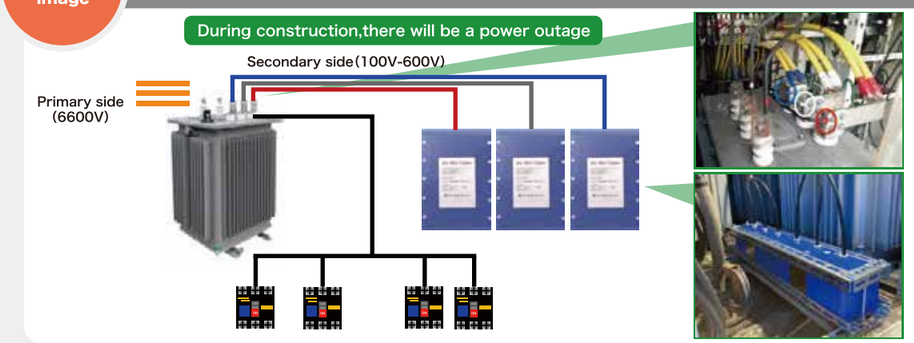


①Connect to the 3phases of the secondary R/S/T of the transformer using crimp terminals

R S T

②Fix it to withstand external shocks according to the customer's instructions.

Home Ecomo may also be attached to a breaker.

## Safety

Processed with special paint ▶ We have improved the safety so that you can use it with peace of mind.

Ecomo's inner box is protected with acryl resin paint, and its outside box is made of cast nylon.
In addition to being waterproof, it is coated with excellent impact resistance, abrasion resistance, rust prevention, and chemical resistance.

## SDGs / Carbon neutral

**ecomo is working on "SDGs" and "Carbon Neutral".**

ecomo contributes to the following two items

**ecomo reduces $CO_2$ by about 22.5t per 100kVA**

**Demonstrates a reduction of 2,557 cedar trees (about 2.5ha)**

* Values are estimated based on our standards.